ANALELE UNIVERSITĂȚII
"EFTIMIE MURGU" REȘIȚA
ANUL XVI, NR. 1, 2009, ISSN 1453 - 7397

Florentina Cziple, Nicolae Vaszilcsin, Bobină Marian, Mirela Barbu

Chemical and Electrochemical Metallic Covering of ABS polymers

The aim of this paper is the deposition of metallic layers on the surface of ABS plastic material, by means of two consecutive procedures, namely: the first is represented by the conductibility through chemical or electro-chemical metallic covering of the polymeric support and the second procedure is the electrodeposition of the metal through galvanization. The chemical mehtod consists in the submission of ABS polymers to some conductibility operations of the plastic material surface through chemical copper plating (chemical roughing, degreasing with ultra-sounds, chemical sensitivation, activation and proper conductibility of the material surface). The electrochemical deposition of nickel was made on the plastic material activated in the mixture solution of graphite with potassium carbonate.

Keywords: *galvanization, metallic covering, ABS polymers*

1. Introduction

The main plastic materials which can be metallically covered are the ABS polymers, polypropilen, epoxidic resins, polyamides, plastic materials, braced with carbon fibre (CFK). Due to the good adherence metal-plastic material, of good mechanical and thermal properties and of an adequate aspect, the ABS plastic materials (acrilonytril- butadiene - phenyl ethilene) occupies the first place in metallic covering[4], [5].

In ABS, the molecules of polybutadiene are dispersed in the form of grains, having spherical geometry in the acrilonytril- phenyl ethilenic support. The butadienic component can be acidified and dissolves a corresponding mixture of acides, thus on the surface of the plastic material, some cavities and microscopic canals are formed. During the electrolysis, the metal is deposed not only on the surface of the plastic material but also on the cavities and canals. In this way, the metallic coating is „anchored" on the surface of the plastic material [5].

Due to the good malleability of the ABS plastic material, this can be easily processed and profitable by casting under pressure and in vacuum.

The advantage of metallic covering of plastic materials consists in the fact that from a light plastic material, with small density, parts with very complex configurations can be manufactured economically and in series,. These parts, furnished with metallic covering, correspond to the most demanding aesthetical and technical exigencies [5].

Each stage in the technological process is tightly connected to the previous one and must be in accordance to it. The rigorous observance of stages and succession of the operations and a careful and clean way of working are very important for the success of the plastic materials galvanization. The disturbances which have appeared in an operation stage cannot be fixed in the next operations and they inevitably occur in the finite product, leading to rejects [4] .

For the aim of metallic covering of plastic materials we should observe the following things:

- the aspect and the form of the part must correspond to the part made of metal;
- the parts must lack internal tensions;
- the surface of the parts must be perfect (without defects, bubbles, alterations)
- we must avoid the contraction holes of profiles with edged passes, pronounced angles, strong edges and big plane surfaces [6] .

2. Chemical and electro-chemical conductibility through the copper covering on the ABS polymers

The chemical method of the conductibilisation of the plastic surface consists in the submission of ABS polymers to some operations of preparing the surface of the plastic material, the roughing of the surface in a solution of sulfochromic mixture, degreasing with ultra-sounds, the sensitivation of the material surface in a solution of tin chloride($SnCl_2$), its activation in a solution of palladium chloride ($PdCl_2$), followed by the chemical conductibility of the surface through chemical copper plating [4].

The ABS plastic material, initially under the form of cream-coloured grains was processed in plates of adequate thickness with the help of the Wichert hydraulic press at a temperature of 170ºC and a pressure of 100 bar (fig.1). Likewise, for the metallic covering we used ABS grey plastic material (masticated), obtained through injection [1], [3].

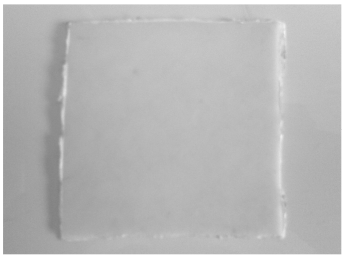

Figure 1. Plate of ABS polymer obtained through casting

The roughing solution of plastic materials is a sulfochromic mixture composed of bichrome ($K_2Cr_2O_7$, 15 g), brimstone acid (H_2SO_4 conc., 100 ml) and water (50 ml). As sensitivation solution it was used a mixture of solution of tin chloride ($SnCl_2$) with hydrogen chloride (HCl, 40 ml/l).

Figure 2. Tablets of ABS polymer chemically conductibilised through copper plating

The activation of the surface of the plastic material is generally done with a solution of palladium chloride (PdCl, 0,25-0,5 g/l) acidified with hydrogen chloride (HCl, 40 ml/l)

The copper chemical bath supposes the mixture in equal parts of three solutions of concentration corresponding to the networks [4], [5]:

- first solution contains coppersulphate ($CuSO_4 \cdot 5H_2O$, 8 g/l) and sodium and potassium tartrate ($C_4H_4KNaO_6$, 40 g/l);
- the second solution contains natrium hidroxide (NaOH, 12 g/l) and sodium carbonate ($Na_2CO_3 \cdot 10\ H_2O$, 8 g/l);
- the third solution contains formaldehyde (HCHO, 50 cm^3/l);

At the beginning the plastic material presents a dark colour then the colour becomes copper-coloured specific to copper (fig.2). This procedure is based on the reduction of copper in the presence of a catalyst. In the case presented, the catalyzing is done by the activated parts.

Figure 3. Plates of ABS polymer after the immersion in a suspension of K_2CO_3 and graphite (a) and electrochemically conductivised (b)

If the electro-chemical deposition is not possible right away after the chemical metallic covering, the parts are dried in warm air or at least they are rapidly washed in hot water not to permit a too strong oxidation of the chemically deposed film. The solutions are kept in niche until their use so that the mixture must be fresh.

Another variant used for the conductivisation of surfaces of plastic material is the copper electrodeposition, using additionally the suspension formed of potassium carbonate (K_2CO_3) and graphite (fig.3) which led to the attainment of more satisfying results than in the case of the chemical copper plating method [9].

The electrochemical procedure is achieved in an electrolysis cell (fig.4) using an acid electrolyte solution also used for the chemical copper plating [2],[7].

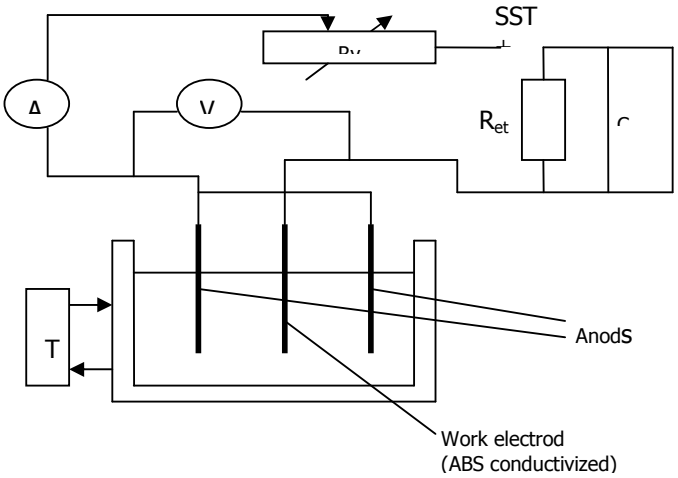

Figure 4. Mounting of the electrochemical cell of copper plating

Parts made of ABS plastic material electrochemically conductivised through copper plating (SST- source of direct current; V- voltmeter, A- ammeter, Rv – variable resistance, Cu anode, work electrode – the conductivised electrode).

The conductivised surface of the ABS polymer is ready for the galvanic deposition of nickel. Thus, for the galvanization of plastic materials chemically conductivised, the copper chemical bath was used for the acid nickel plating.

3. Copper and nickel plating through galvanization of the conductivised plastic materials

For the aim of galvanization of the conductivised plastic materials it was used a cathode made of conductivised plastic material and as anodes, according to the case, there were used 4 bright and polished copper or nickel anodes. In the case of chemically conductivised plastic materials, we obtained a glossy copper deposition on the material surface, but due to the fact that the deposited copper layer is very thin, the resulted deposition is uneven.

Figure 5. Casted ABS parts electrochemically metal covered (Cu and Ni plating)

For the plates made of ABS electrochemically conductivised the results were more satisfying, the current efficiencies obtained were higher and the copper and nickel depositions were even on the whole surface of the plastic material (fig.5).

4. Conclusions

The analysis at the optic microscope was achieved with the aim of observing the quality of depositions on the surface of the plastic materials and the main phenomena which take place at the surface of the plastic material. The graphite and carbonate layer applied on the surface of the material favours the electrochemical deposition of copper forming many crystallization centres on which the copper ions are reduced. After the copper deposition, it follows the nickel deposition which does not present any difficulties.

The image magnified 50 and 100 times (fig. 6), indicates a superior quality of the copper layer deposited after graphitization (fig. 6), specific to the electrochemical conditioning of the polymer surface towards the chemical stimulation (a). The experiment of metal covering of plastic materials was achieved for two ABS types: masticated and casted, good results were obtained in both

situations. The masticated ABS was used in the chemical conductivity procedure and the casted one was used in the electrochemical conductivity procedure.

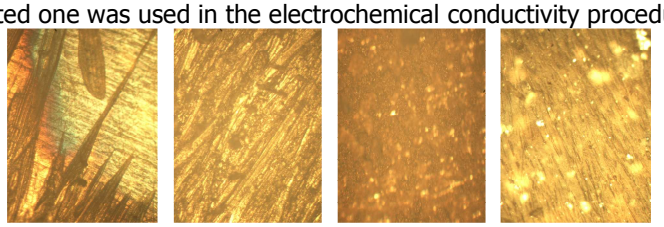

Figure 6. The influence of the nature of the ABS conductivized: a) chemical conductivity; b) conductivity through graphitization

In the electrolysis, we obtained copper and nickel depositions which are more compact and even for the casted plastic materials and more satisfying current efficiencies for the electrolysis time and the current density used. Thus, for the metal covering of plastic materials is recommended [8] to use the modern procedure with activation through graphitization and then the electrochemical deposition of the desired metal.

References

[1] Andritschky, M., Pischow, K., *Mass production of thick copper vacuum metalization on plastic parts,* 2008, 82, 1269-1273;

[2] Bandrabur F., Lazăr L., Apostolescu N., *Ingineria proceselor electrochimice protecţie anticorosivă The Engineering of Electrochemical Processes anti+corrosive Protection*, Printing House Ecozone, Iaşi, 2007;

[3] Chang, Y.S., Lin, C.Y., *Materials Chemistry and Physics*, 1991, 251-263;

[4] Geller, E., *Metalizarea materialelor plastice Plastic Materials Metallization*, Editura Tehnică, Bucureşti, 1974;

[5] Grünwald E., Mureşan L., Vermeşan G., Culic H., Culic A., *Tratat de galvanotehnică*, Editura Casa Cărţii de Ştiinţă, Cluj-Napoca, 2005;

[6] Oniciu, L., Gründwald, E., *Galvanotechnics*, The Scientifical and Pedagogical Printing House Bucureşti, 1980;

[7] Rădoi, I., Nemeş, M., Vaszilcsin, N., *Electrochemistry and Corrosion* Technical University, Timişoara, 1993;

[8] Rosato, D., Rosato, D., *Plastics Engineered Product Design*, 2003,p.198

[9] Tzeng, S. S., Chang, F., *Materials Science and Engineering*, 2001, 302, 258-267;